KIT COMPONENTS

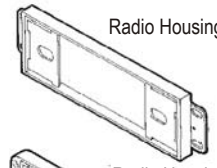
Radio Housing "A"

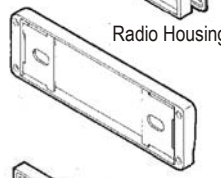
Radio Housing "B"

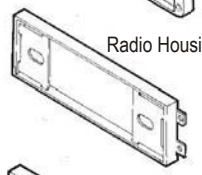
Radio Housing "C"

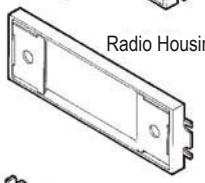
Radio Housing "D"


Spacer Set "A"


Spacer Set '


(4) Plugs


(4) Oval-Head Screws


(4) Washers


(4) Pan-Head Screws

TOOLS REQUIRED


Phillips screwdriver


Cutting tool

Rev.05-28-09

99-7301
INSTALLATION INSTRUCTIONS

APPLICATIONS

CAR	PAGE
HYUNDAI	
Accent 1995-05	1
Elantra 1992-95	1
Excel 1986-89	2
Excel 1990-94	2
Scoupe 1991-95	3
Sonata (Single DIN) 1995-98	3
Tiburon 1997-02	4
MITSUBISHI	
Precis 1986-89	5
Precis 1990-93	4

WIRING AND ANTENNA CONNECTIONS (Sold Separately)

Harness:

- **70-7301 - Hyundai/KIA harness 1999-2008**
- **70-7300 - Hyundai harness 1990-2001**
- **70-1736 - Hyundai/Mitsubishi harness 1986-1994**

Antenna Adapter:

- **No antenna adapter required**

KNOWLEDGE IS POWER

Enhance your installation and fabrication skills by enrolling in the most recognized and respected mobile electronics school in our industry. Log onto www.installerinstitute.com or call 800-354-6782 for more information and take steps toward a better tomorrow.

1-800-221-0932 www.metraonline.com

© COPYRIGHT 2001-09 METRA ELECTRONICS CORPORATION

HYUNDAI Accent 1995-05

1

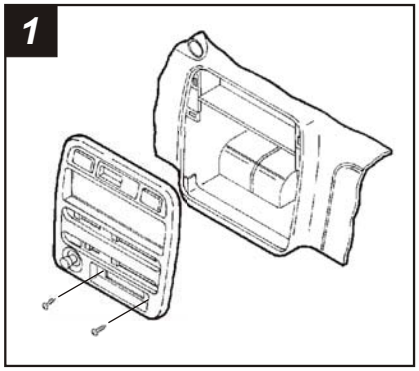

Disconnect the negative battery terminal to prevent an accidental short circuit. Remove the ashtray and (2) Phillips screws exposed. Disconnect (2) vent cables from the vent levers located behind the driver's side dash. Unclip the dash trim bezel and disconnect the wiring. Remove (4) Phillips screws securing the factory head unit and disconnect the wiring.

2

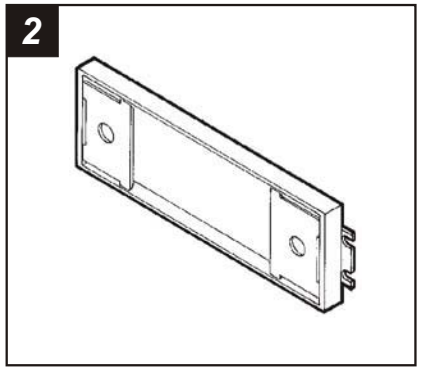

Locate Radio Housing "D". Locate the (4) factory screws previously removed in step #1 and retain for use in step #6. Skip to the Installation Instructions for ALL VEHICLES on Page #6.

HYUNDAI Elantra 1992-95

1

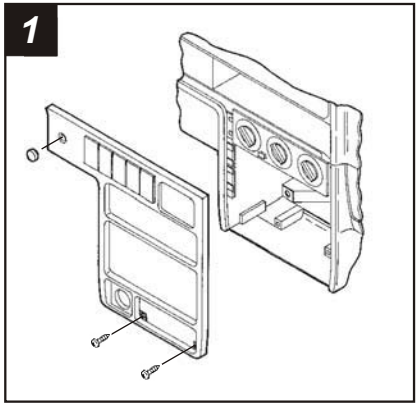

Disconnect the negative battery terminal to prevent an accidental short circuit. Remove the ashtray and (2) screws exposed. Pop out the round plug from the radio trim bezel and remove (1) screw exposed. Unclip and remove the trim bezel. Remove (4) screws from the factory radio, slide the radio out and disconnect the wiring.

2

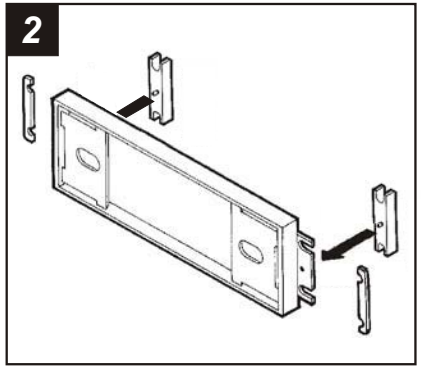

Convert Radio Housing "A" by cutting along the v-cut on each mounting tab and removing the indicated segments. Attach Spacer Set "A" to the back of the converted mounting tabs. Locate (4) Pan-Head Screws and (4) Washers included in the kit and retain for use in step #6. Skip to the Installation Instructions for ALL VEHICLES on Page #6.

4

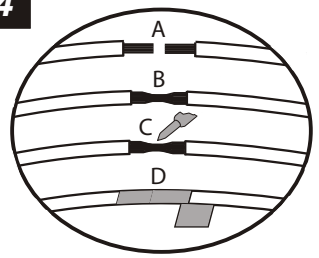

A) Strip wire ends back ½"
B) Twist ends together
C) Solder
D) Tape

Locate the factory wiring harness in the dash. Metra recommends using the proper mating adaptor and making connections as shown. (Isolate and individually tape off the ends of any unused wires to prevent electrical short circuit).

5

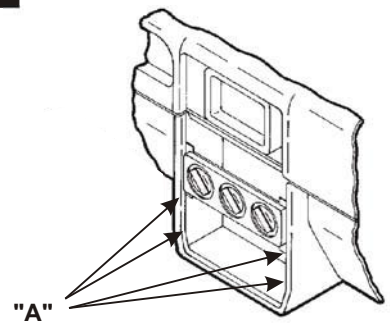

Locate the mounting positions in the sub-dash.

6

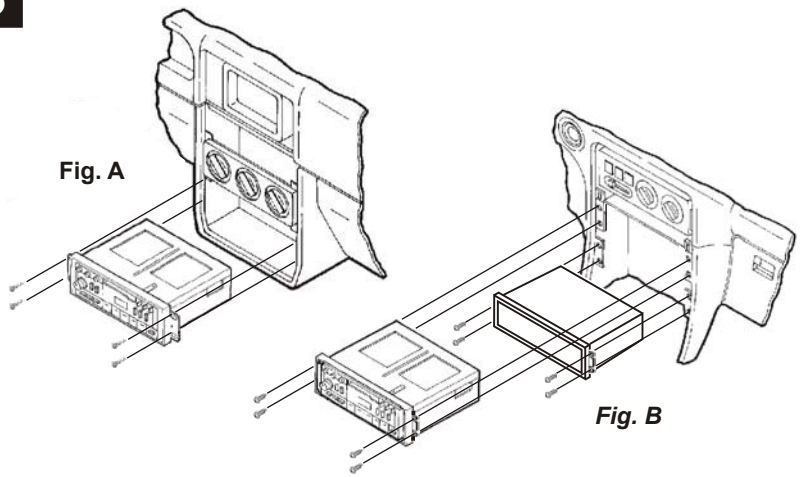

ACCENT, ELANTRA, EXCEL, PRECIS, SCOUPE, TIBURON: Re-connect the battery terminal and test the unit for proper operation. Mount the head unit/kit assembly to the sub-dash using the hardware indicated in step #2 (see Fig. A).

SONATA: Re-connect the battery terminal and test the unit for proper operation. Mount the factory pocket to the sub-dash with (4) Phillips screws previously removed in step #1. Mount the head unit/kit assembly to the sub-dash with (4) Phillips screws previously removed in step #1 (see Fig. B).

MITSUBISHI Precis 1986-89

1

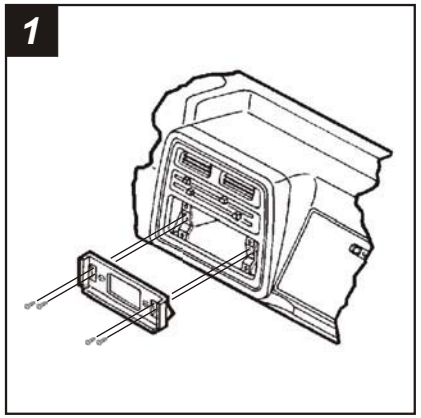

Disconnect the negative battery terminal to prevent an accidental short circuit. Remove (4) Phillips screws from the factory radio mounting plate. Slide the radio assembly out and disconnect the wiring.

2

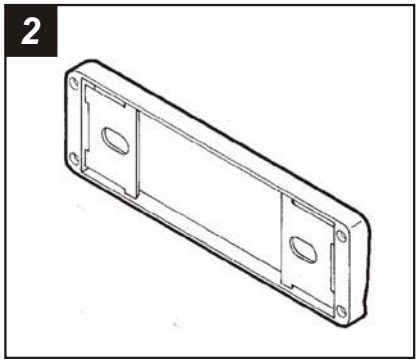

Locate Radio Housing "B" included in the kit and retain for use in step #3. Locate (4) Oval-Head Screws and (4) Plugs included in the kit and retain for use in step #6. Skip to the Installation Instructions for ALL VEHICLES on Page #6.

ALL VEHICLES

3

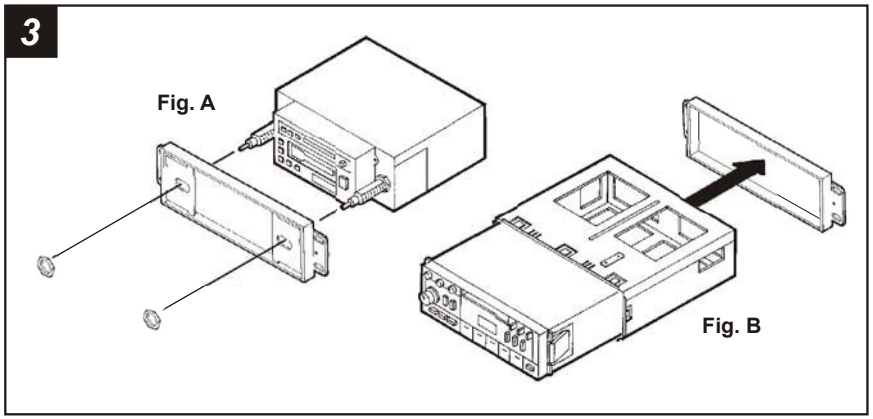

2-SHAFT HEAD UNITS: Slide the aftermarket head unit into the kit and secure with shaft nuts. (see Fig. A)

DIN HEAD UNITS: Cut and remove the shaft supports. Slide the DIN cage into the Radio Housing and secure by bending the metal locking tabs down. Slide the aftermarket head unit into the cage until secure. (see Fig. B)

HYUNDAI Excel 1990-94

1

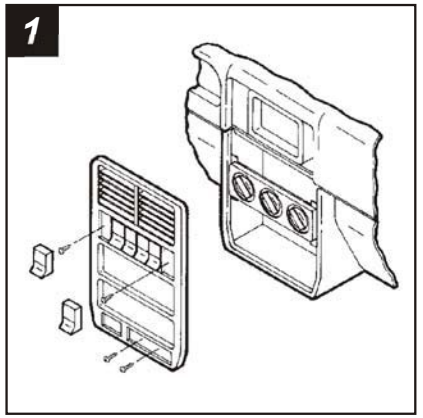

Disconnect the negative battery terminal to prevent an accidental short circuit. Remove (2) screws from the ashtray cavity. Pop out the hazard switch and remove (1) screw exposed. Pop out the switch blank from the far-right position and remove (1) screw exposed. Remove the trim bezel/factory radio and disconnect the wiring.

2

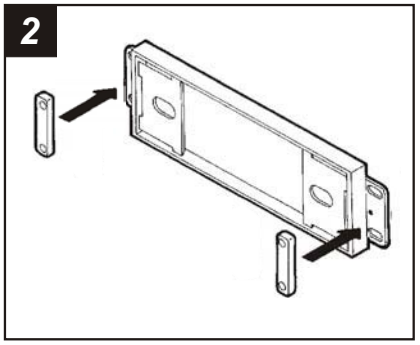

Locate Radio Housing "A" included in the kit and retain for use in step #3. Locate (4) Pan-Head Screws and (4) Washers included in the kit and retain for use in step #6. (It may be necessary to attach Spacer Set "B" to the front of the mounting tabs for some later models). Skip to the Installation Instructions for ALL VEHICLES on Page #6.

HYUNDAI Excel 1986-89

1

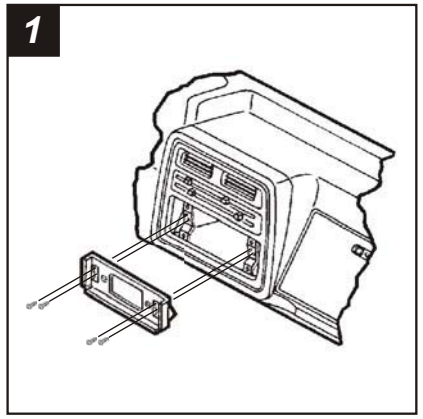

Disconnect the negative battery terminal to prevent an accidental short circuit. Remove (4) Phillips screws from the factory radio mounting plate. Slide the radio assembly out and disconnect the wiring.

2

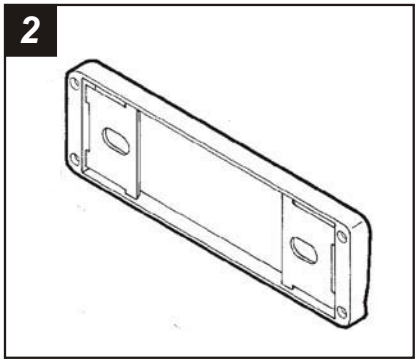

Locate Radio Housing "B" included in the kit and retain for use in step #3. Locate (4) Oval-Head Screws and (4) Plugs included in the kit and retain for use in step #6. Skip to the Installation Instructions for ALL VEHICLES on Page #6.

HYUNDAI Scoupe 1991-95

1

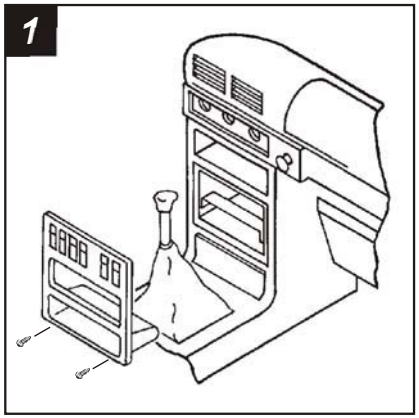

Disconnect the negative battery terminal to prevent an accidental short circuit. Remove (2) screws from the bottom of the radio trim bezel. Remove the bezel and disconnect the wiring. Remove (4) screws from the factory radio, slide the radio out and disconnect the wiring.

2

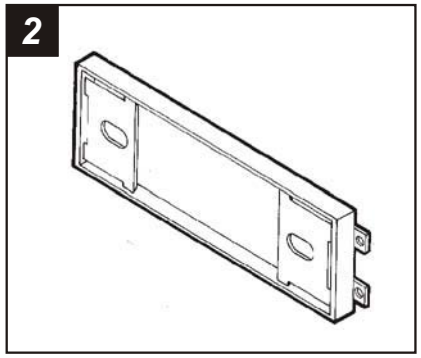

Locate Radio Housing "C" included in the kit and retain for use in step #3. Locate the (4) factory screws previously removed in step #1 and retain for use in step #6. Skip to the Installation Instructions for ALL VEHICLES on Page #6.

HYUNDAI Sonata (Single DIN) 1995-98

1

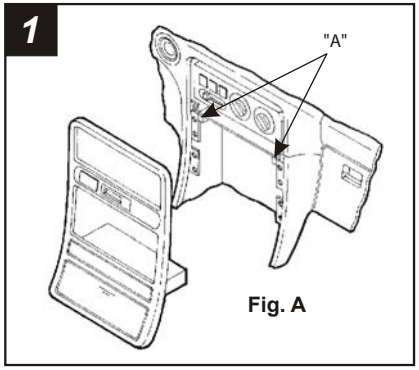

Fig. A

Disconnect the negative battery terminal to prevent an accidental short circuit. Unclip the gear shifter trim panel and remove (1) screw exposed. Unclip the dash trim bezel and remove. Remove (4) Phillips screws securing the factory head unit and disconnect the wiring. Cut and remove tabs "A" located in the top corners of the dash cavity. (see Fig. A).

2

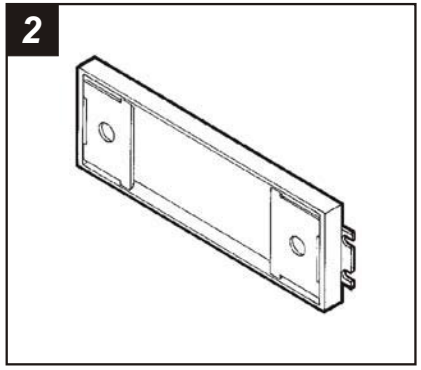

Locate Radio Housing "D". Locate the (4) factory screws previously removed in step #1 and retain for use in step #6. Skip to the Installation Instructions for ALL VEHICLES on Page #6.

HYUNDAI Tiburon 1997-02

1

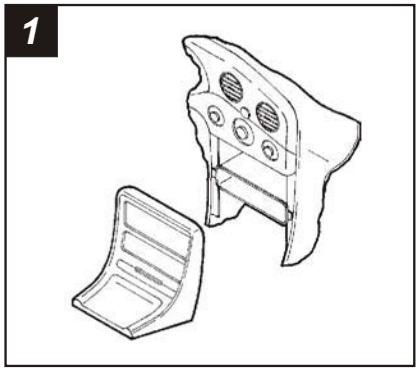

Disconnect the negative battery terminal to prevent an accidental short circuit. Remove (4) Phillips screws securing the center console. Pry out on the front edge of the console and unclip the radio trim bezel. Remove (2) Phillips screws securing the factory pocket and remove. Remove (4) Phillips screws securing the factory head unit and disconnect the wiring.

2

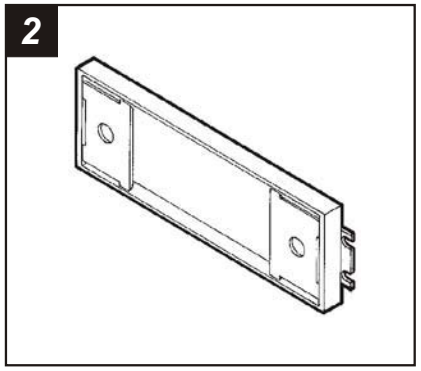

Locate Radio Housing "D". Locate the (4) factory screws previously removed in step #1 and retain for use in step #6. Skip to the Installation Instructions for ALL VEHICLES on Page #6.

MITSUBISHI Precis 1990-93

1

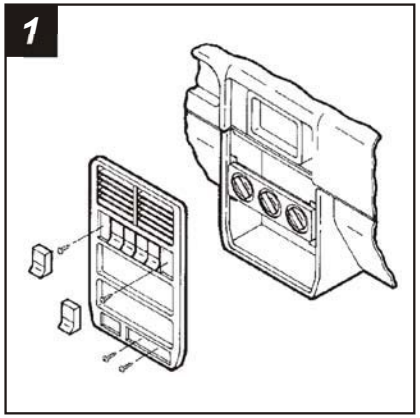

Disconnect the negative battery terminal to prevent an accidental short circuit. Remove (2) screws from the ashtray cavity. Pop out the hazard switch and remove (1) screw exposed. Pop out the switch blank from the far-right position and remove (1) screw exposed. Remove the trim bezel/factory radio and disconnect the wiring.

2

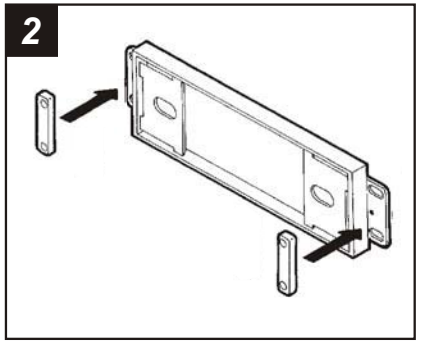

Locate Radio Housing "A" included in the kit and retain for use in step #3. Locate (4) Pan-Head Screws and (4) Washers included in the kit and retain for use in step #6. (It may be necessary to attach Spacer Set "B" to the front of the mounting tabs for some later models). Skip to the Installation Instructions for ALL VEHICLES on Page #6.