INSTALLATION INSTRUCTIONS FOR PART 95-7861

APPLICATIONS

Honda Pilot
•2003-2005
•2006-2008 ***(Without Factory Navigation)***



95-7861

KIT FEATURES

- Double DIN Radio Provision
- Stacked ISO Mount Units Provision

KIT COMPONENTS

A) "LX" Double DIN Trim Plate B) "EX" Double DIN Trim Plate C) Double DIN Brackets

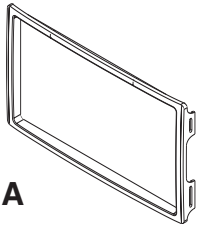
A

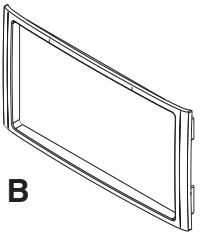
B

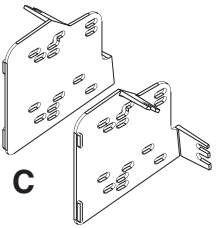
C

TOOLS REQUIRED:

Small Flat Blade Screwdriver/ • Panel Removal Tool
• Phillips Screwdriver • Socket Set



1-800-221-0932 **www.metraonline.com**

© COPYRIGHT 2004-2008 METRA ELECTRONICS CORPORATION

TABLE OF CONTENTS

Dash Disassembly

- Honda Pilot 2003-2005 1

- Honda Pilot 2006-2008 (Without Factory Navigation) 2

Kit Assembly

- DIN Radio Provision 3

- ISO Radio Provision 4

Final Assembly 5

Note:
Refer also to the instructions included with the aftermarket radio.

HONDA PILOT 2003-2005

1 Disconnect the negative battery-terminal to prevent an accidental short circuit.

2 Using a small flat blade screw-driver remove the blank plate from upper right side of radio trim panel. **(Figure A)**

3 Unsnap radio trim panel. Unplug switches and remove panel. **(Figure B)**

4 Remove (4) 10mm bolts securing radio, unplug and remove radio. **(Figure C)**

Continue to kit assembly.

A

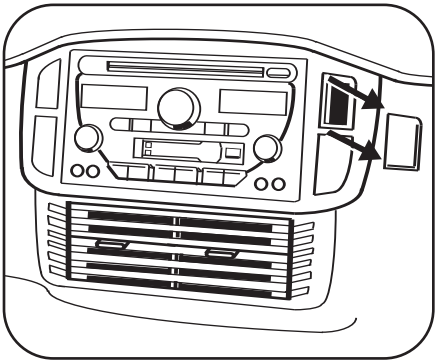

B

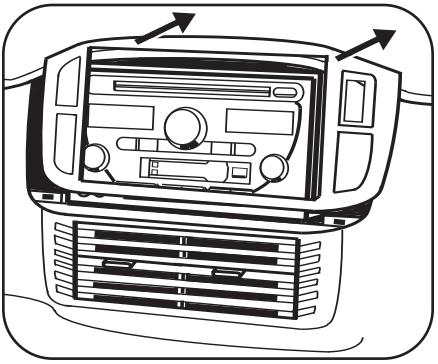

C

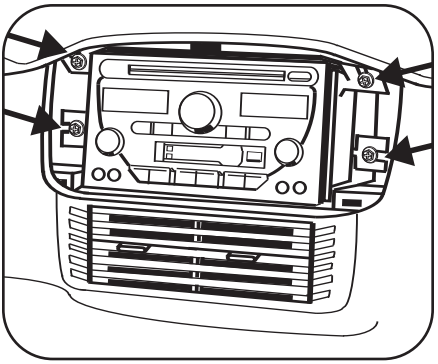

HONDA PILOT 2006-2008

(Without Factory Navigation)

1 Disconnect the negative battery-terminal to prevent an accidental short circuit.

2 Remove (2) screws from the top of the instrument panel trim. Unclip and remove the instrument panel trim. **(Figure A)**

3 Unclip and remove the left center trim panel. **(Figure B)**

4 Unclip the radio trim panel. Unplug and remove the panel. **(Figure C)**

5 Remove the (4) screws securing the radio. Unplug and remove the radio. **(Figure D)**

Continue to kit assembly.

A

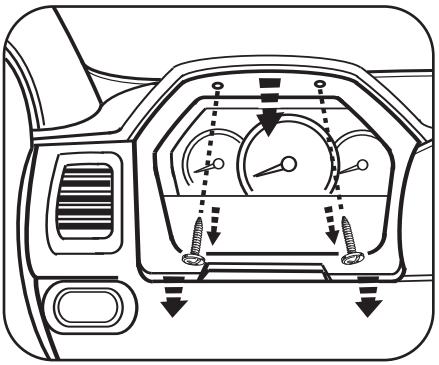

B

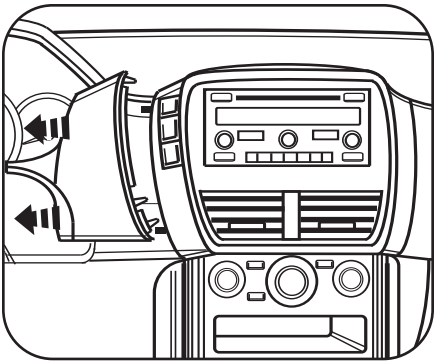

D

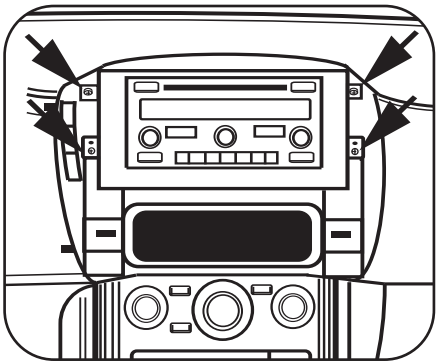

C

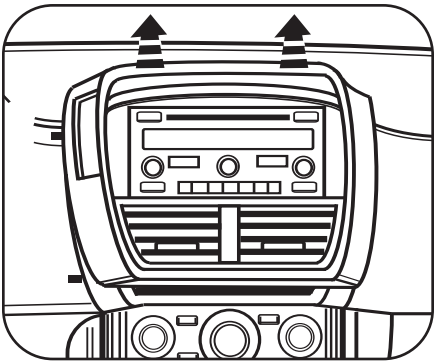

DOUBLE DIN RADIO PROVISION

Note: Refer also to the instructions included with the aftermarket radio.

NOTE: Select the proper radio housing for your vehicle. EX models use the (EX) Double DIN Trim Plate and LX models use the (LX) Double DIN Trim Plate.

1 Snap the Double DIN brackets to the inside edge of the Double DIN trim plate. **(Figure A)**

2 Slide the Double DIN radio into the bracket/trim plate assembly and secure the radio to the assembly using the screws supplied with the radio. **(Figure B)**

Continue to final assembly.

A

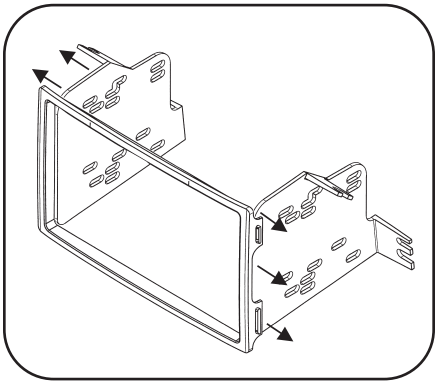

B

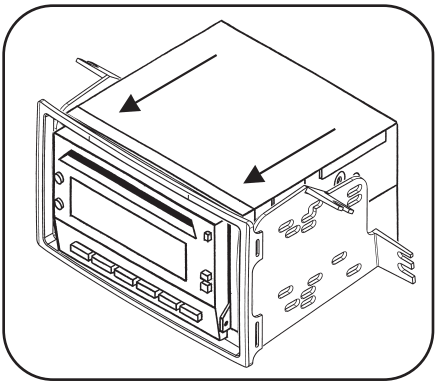

STACKED ISO UNITS PROVISION

**Note: Refer also to the instructions included with the aftermarket radio.*

NOTE: Select the proper radio housing for your vehicle. EX models use the (EX) Double DIN Trim Plate and LX models use the (LX) Double DIN Trim Plate.

1 Snap the Double DIN brackets to the inside edge of the Double DIN trim plate. **(Figure A)**

2 Slide the stacked ISO units into the bracket/trim plate assembly and secure the units to the assembly using the screws supplied with the units. **(Figure B)**

Continue to final assembly.

A

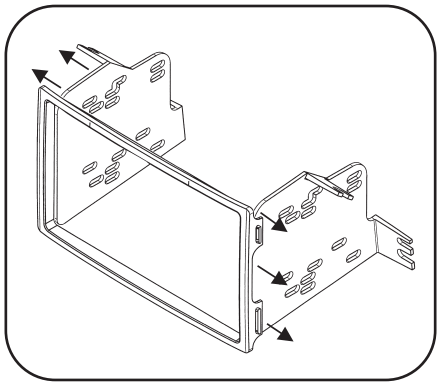

B

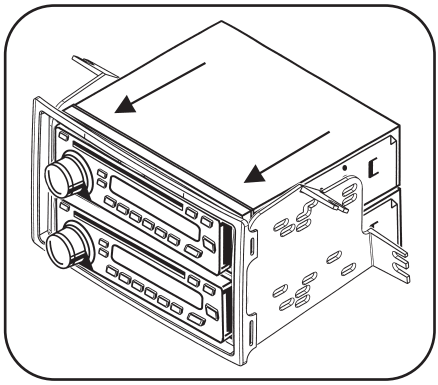

FINAL ASSEMBLY

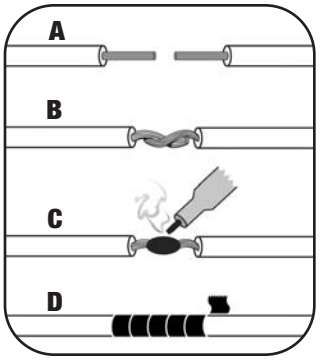

(A) Strip wire ends back 1/2"

B) Twist ends together

C) Solder

D) Tape

1. Locate the factory wiring harness in the dash. Metra recommends using the proper mating adapter and making connections as shown. (Isolate and individually tape off the ends of any unused wires to prevent electrical short circuit.)
2. Re-connect the negative battery terminal and test the unit for proper operation.
3. Reassemble radio and dash assemblies in reverse order of disassembly.

FINAL WIRING CONNECTIONS

Make wiring connections using the EIA color code chart shown below and the instructions included with the head unit. Metra recommends making connections as shown below; Strip, Splice, Solder, Tape. Isolate and individually tape off ends of any unused wires to prevent electrical short circuit.

METRA / EIA WIRING CODE

12V Ignition / Acc. . . . . Red	Right Front (+) . . . . . Gray
12V Batt / Memory. . . . . Yellow	Right Front (-). . . . . Gray/ Black
Ground. . . . . Black*	Left Front (+) . . . . . White
Power Antenna. . . . . Blue	Left Front (-). . . . . White / Black
Amp Turn-On . . . . . Blue / White	Right Rear (+) . . . . . Violet
Amp Ground. . . . . Black / White	Right Rear (-) . . . . . Violet / Black
Illumination . . . . . Orange	Left Rear (+) . . . . . Green
Dimmer . . . . . Orange / White	Left Rear (-) . . . . . Green / Black

***NOTE:** When a Black wire is not present, ground radio to vehicle chassis.
All colors may not be present on all leads due to manufacturer's specifications.

95-7861 INSTRUCTIONS

1-800-221-0932 www.metraonline.com

REV. 05/29/08 © COPYRIGHT 2004-2008 METRA ELECTRONICS CORPORATION INST95-7861